1

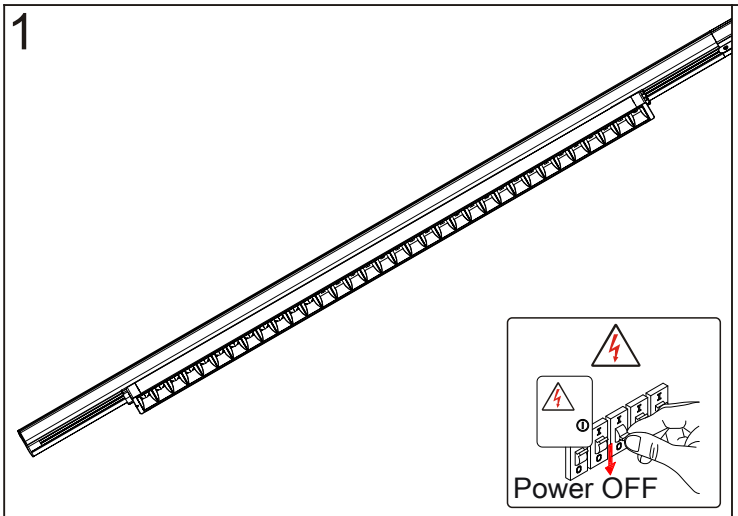

2 **On/Off**

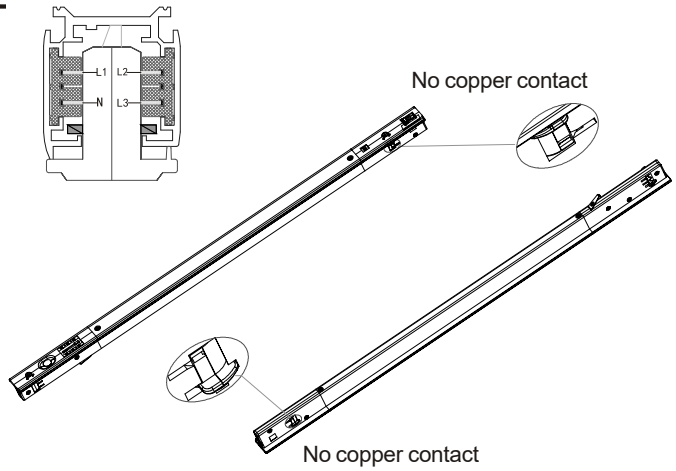

3 **Option 2: Dimming**

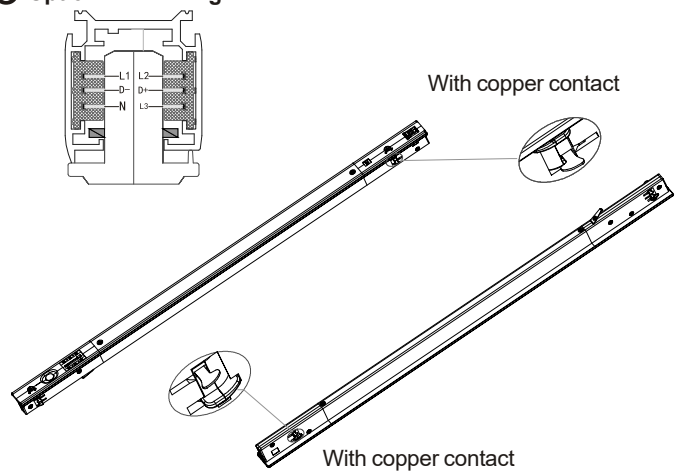

4

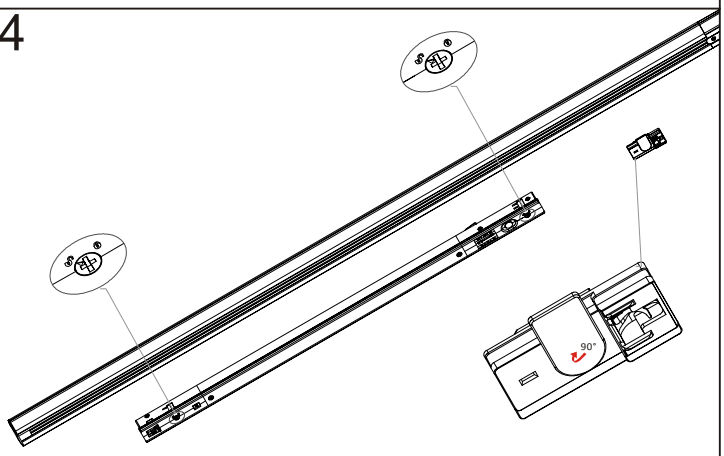

5

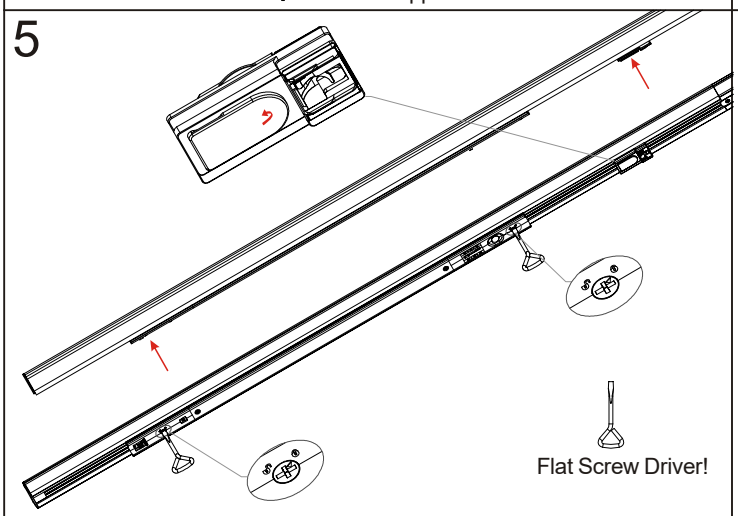

6

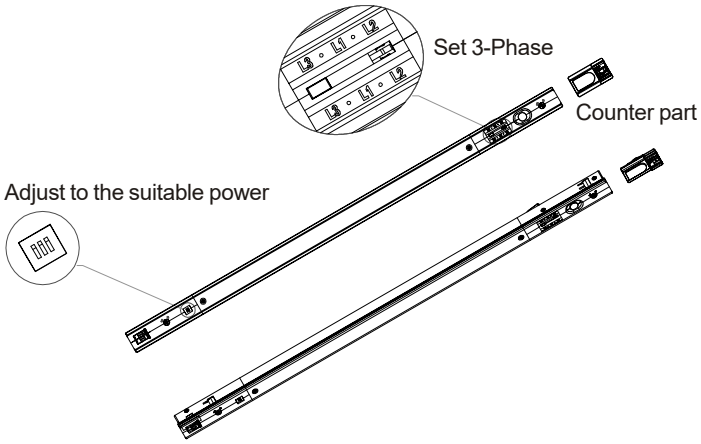

7

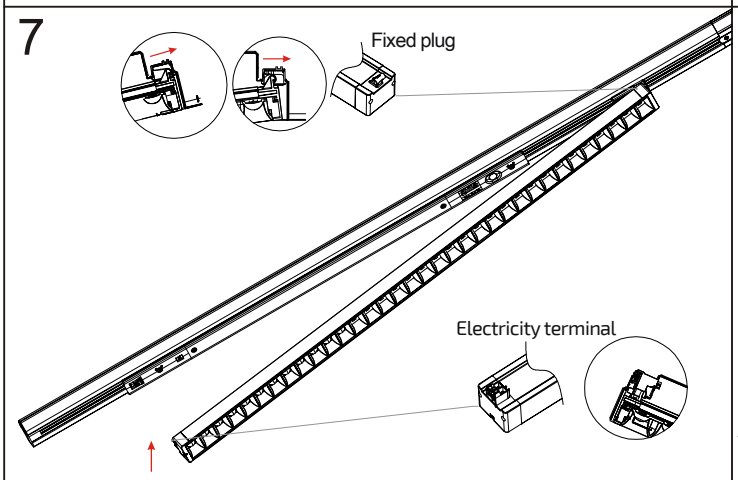
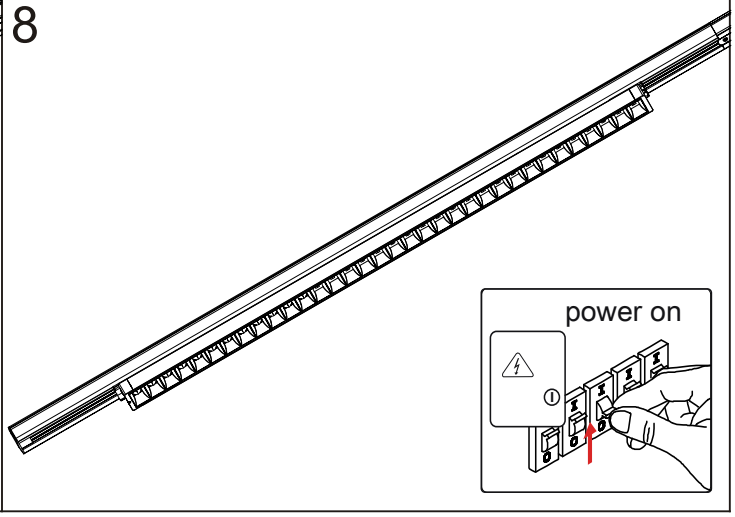
8